# BID75211BGUK

Interior Lighting

Hisense

## General information

| | | | |
|---|---|---|---|
| Product group: | **Double oven** | Oven type: | **Multisystem oven** |
| Energy efficiency class: | **A** | Energy efficiency class oven 2: | **A** |
| Colour of the product: | **Black** | Control panel material: | **Glass** |
| Interior material: | **Extra Durable Enamel** | Cavity material of oven 2: | **Enamelled steel** |

## Efficiency

| | | | |
|---|---|---|---|
| Usable oven volume: | **54 L** | Usable oven volume 2: | **38 L** |

## Control

| | | | |
|---|---|---|---|
| Temperature control: | **Mechanical** | Max. temperature control in lower oven: | **250 °C** |
| Timer: | **Electronic** | | |

## Heating types

| | | | |
|---|---|---|---|
| Heating type: | **Defrost Mode** | Heating type: | **Circular heater** |

## Features

| | | | |
|---|---|---|---|
| Interior light: | **Behind** | Oven illumination 2: | **Behind** |
| Simultanious baking on multiple levels: | **Yes** | | |

## Equipment

| | | | |
|---|---|---|---|
| Oven guides: | **1 wire guide** | Oven guides for lower oven: | **Wire guide** |
| Roasting spit set: | **No** | Wire shelf: | **1 pcs** |
| Wire shelf (oven 2): | **1 pcs** | Multifunctional oven grid (oven 2): | **Yes** |
| Carrying handle: | **No** | | |

## Safety

| | | | |
|---|---|---|---|
| Door glazing: | **Double glazed oven door with one heat deflector** | Lower oven door glazing: | **Double glazed oven door with one heat deflector** |

## Cleaning

| | |
|---|---|
| Lower oven catalytic : | **No** |

## Technical data

| | | | |
|---|---|---|---|
| Energy consumption lower conventional oven : | **0.68 kWh** | Lower oven power: | **4 kW** |
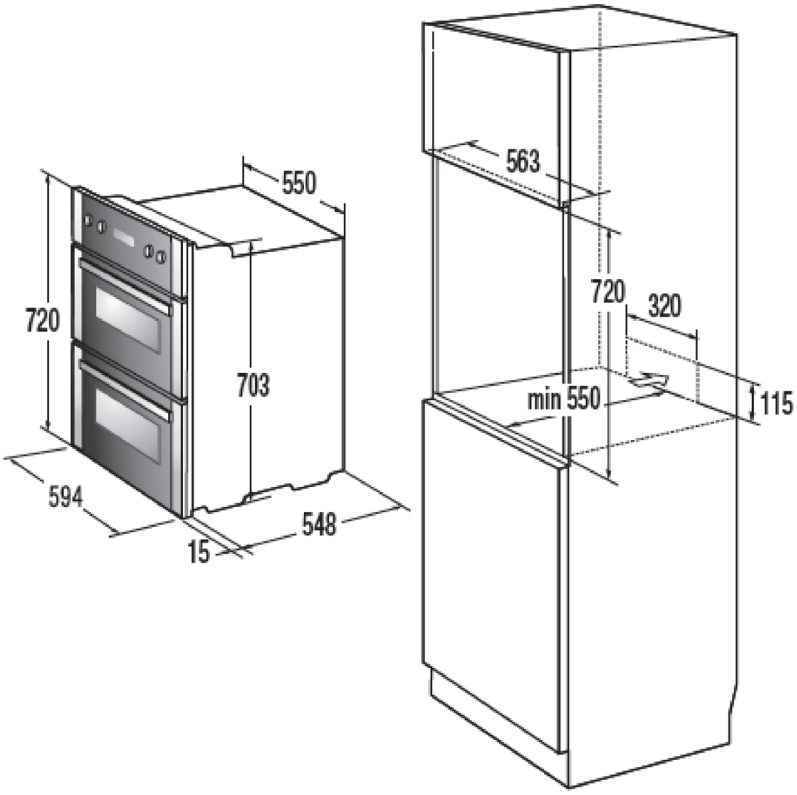
| | | | |
|---|---|---|---|
| Width of the product: | **594 mm** | Height of the product: | **720 mm** |
| Depth of the product: | **563 mm** | Width of niche size for installation min.: | **560 mm** |
| Height of niche size for installation min.: | **720 mm** | Depth of niche size for installation min.: | **550 mm** |
| Width of the packed product: | **693 mm** | Height of the packed product: | **800 mm** |
| Depth of the packed product: | **718 mm** | Gross weight: | **47.9 kg** |
| Net weight: | **41.8 kg** | Voltage: | **220-240 V** |
| Frequency: | **50 Hz, 60 Hz** | Product code: | **736694** |
| EAN code: | **3838782434549** | | |